ML300 Fanless NUC Industrial Computer

Assembly Guide

Version 1.0

1 - INCLUDED PARTS

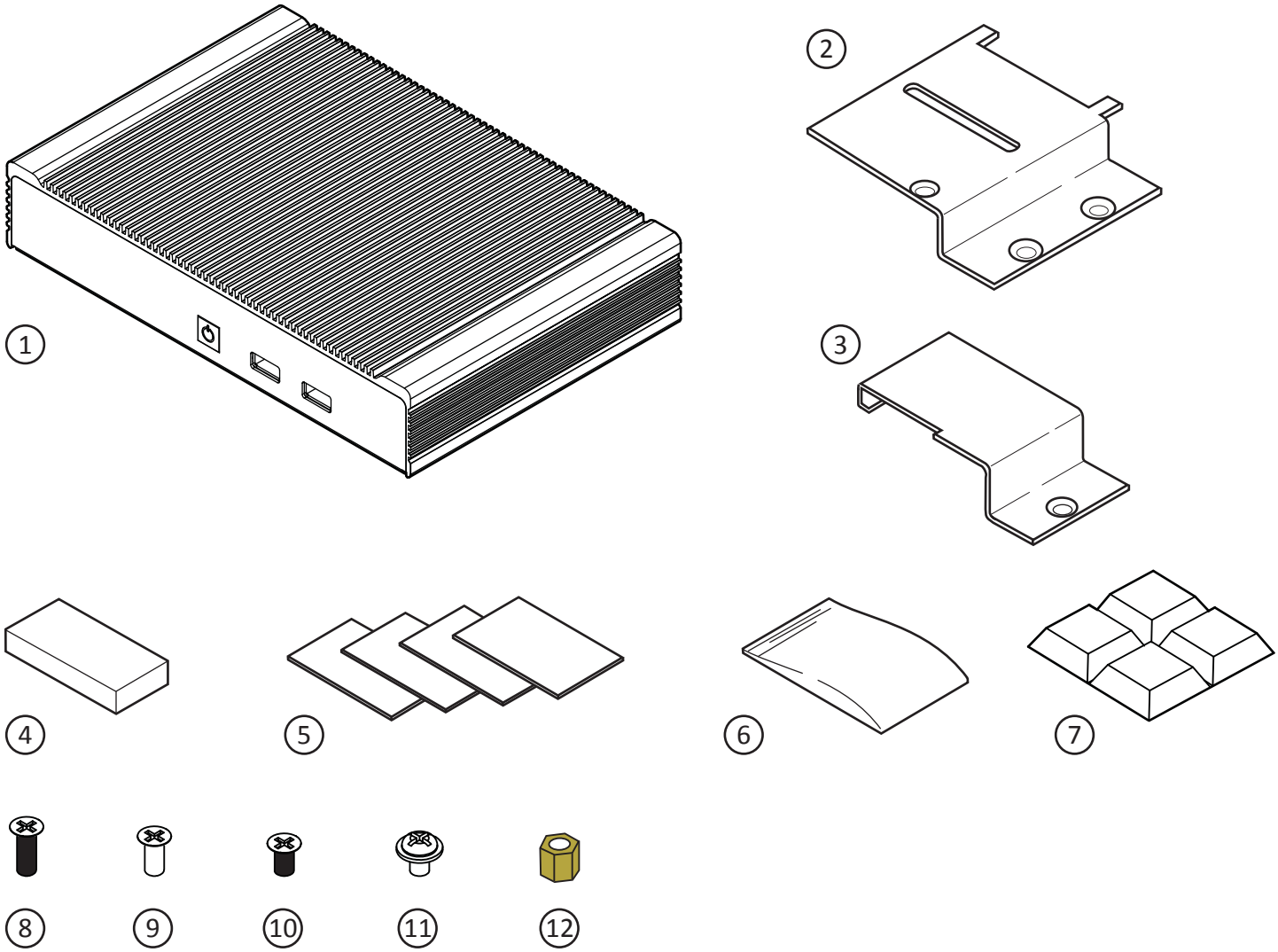

1. ML300 Fanless NUC Case
2. Wifi Heatsink Bracket
3. mSATA Heatsink Bracket
4. Rubber Block
5. 4 x Thermal Pad
6. Thermal Paste
7. 4 x Rubber Feet
8. 10 x M3 6mm Flat Head Screw (Black)
9. 3 x M3 5mm Flat Head Screw (Silver)
10. 12 x M3 4mm Flat Head Screw (Black)
11. 4 x M3 4mm Flange Screw (Silver)
12. 2 x Hex Male - Female 7mm (Brass)

2 - SUGGESTED TOOLS

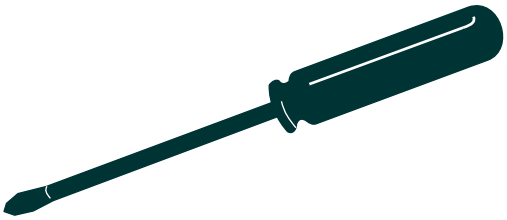

1 No. 1 Philips Screwdriver
Used for mSATA and WIFI screws on the motherboard

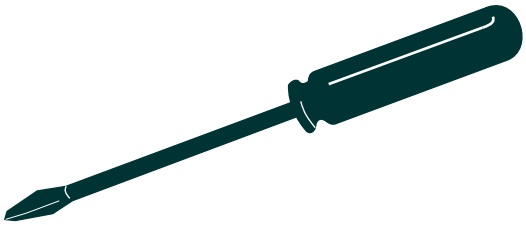

2 No. 2 Philips Screwdriver
Used for: 8 9 10 11

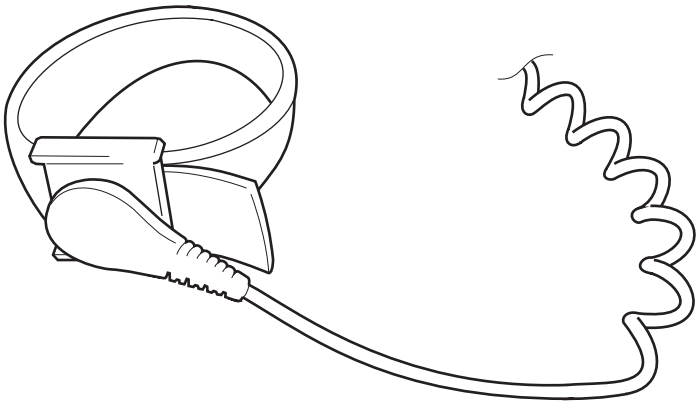

3 Anti-static ESD Wrist Strap

When you see this symbol, be sure to wear an anti-static ESD wrist strap to prevent damage to the components.

3 - SYSTEM OVERVIEW

3.1 ML300 Dimensions

Shown with Optional Wall Mounting Brackets WDMK-1040

All Dimensions in mm

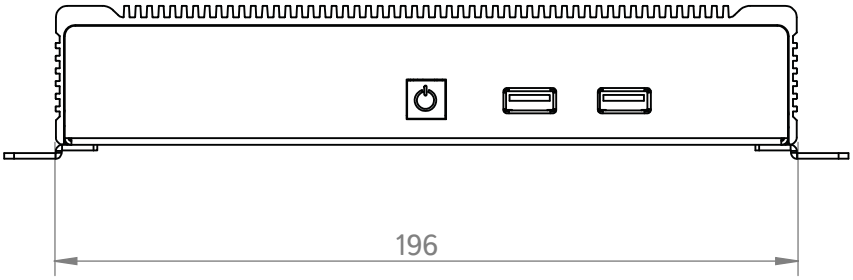

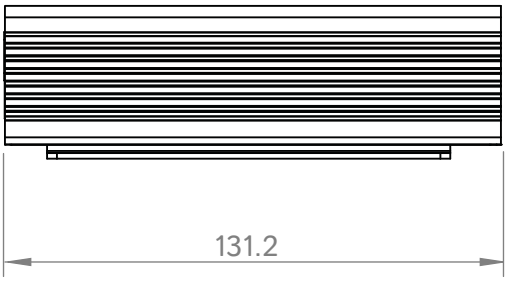

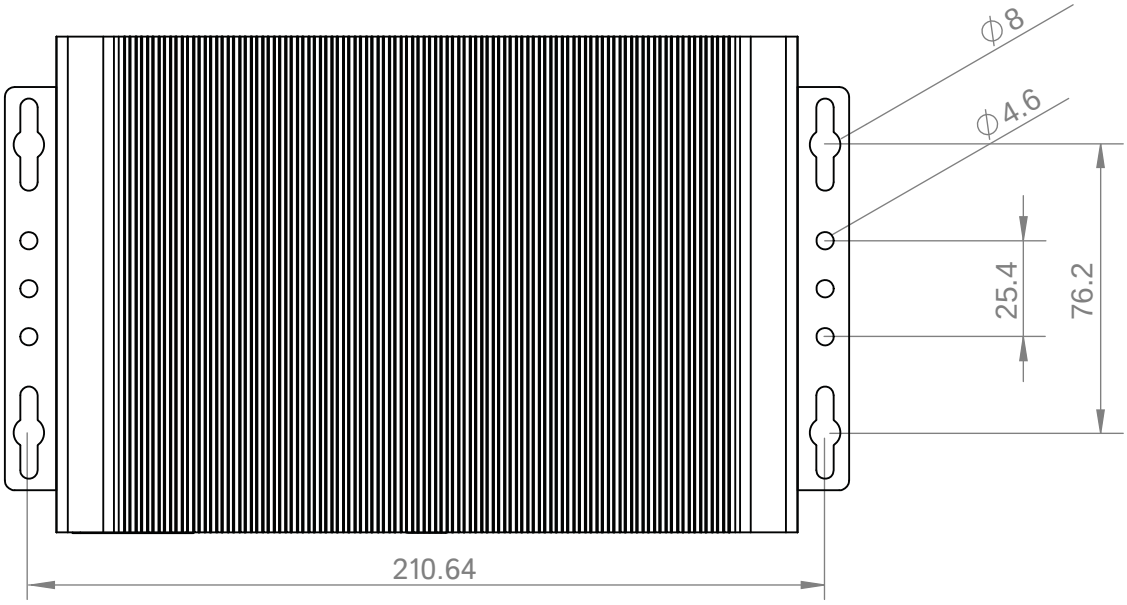

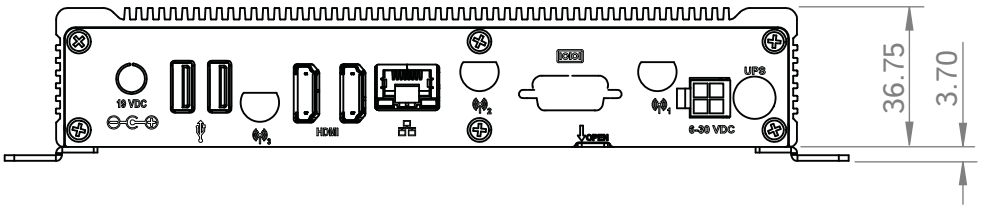

3 - SYSTEM OVERVIEW

3.2 Front Panel I/O

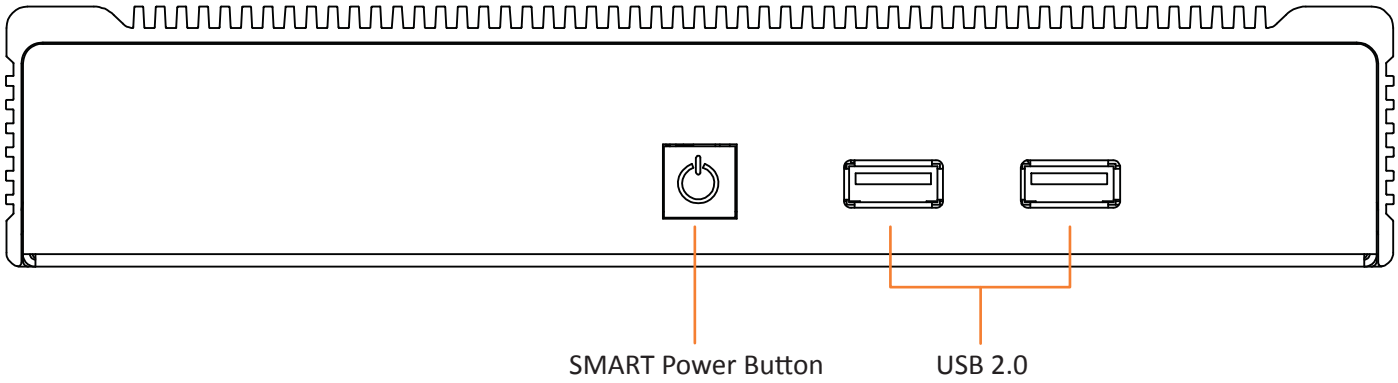

3 - SYSTEM OVERVIEW

3.3 Back Panel I/O - DCP847SKE (Ski Lake) and D33217GKE (Golden Lake)

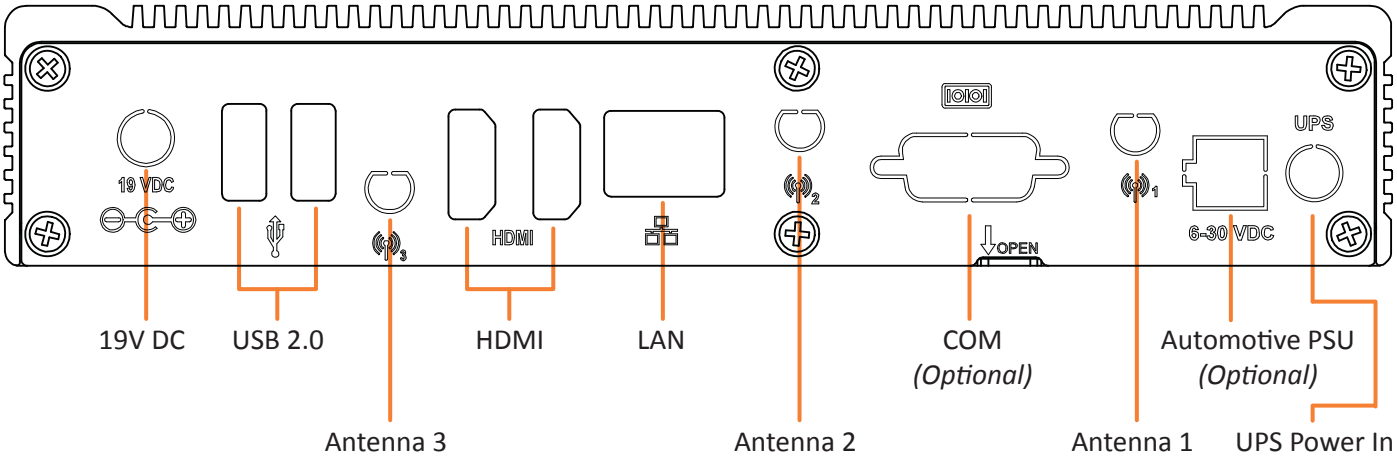

3.4 Back Panel I/O - D53427RKE Rend Lake

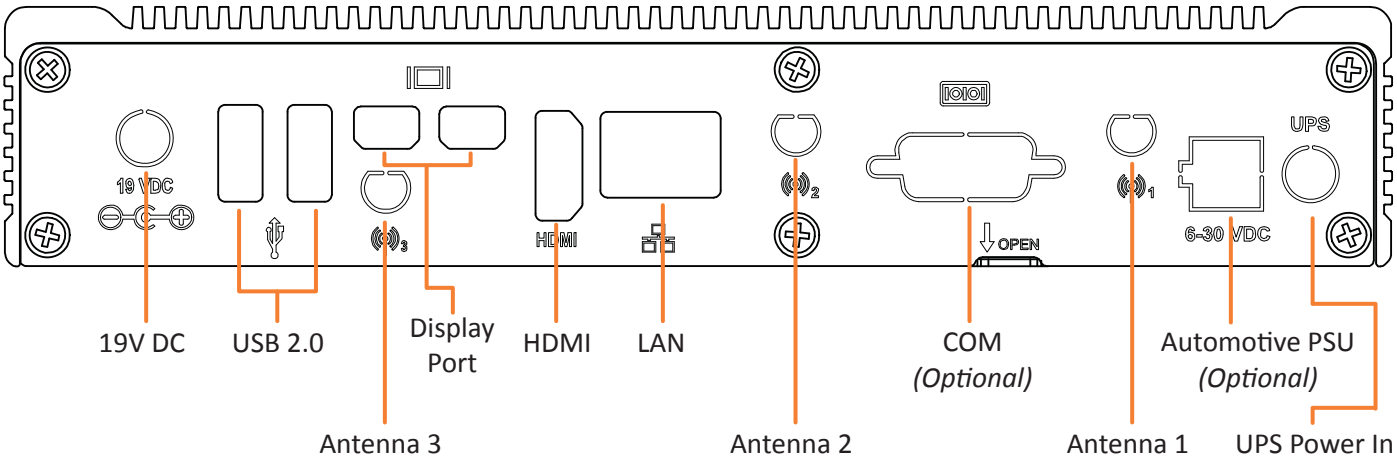

4 - ASSEMBLY

4.1 Opening the Case

1. Remove the three bottom screws on the back plate and hinge open the case using the Open Tab.

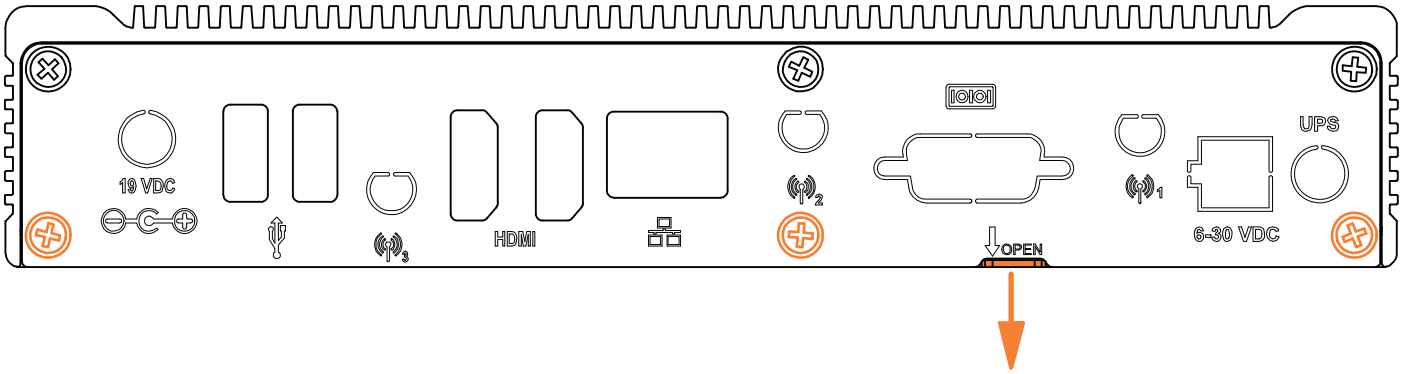

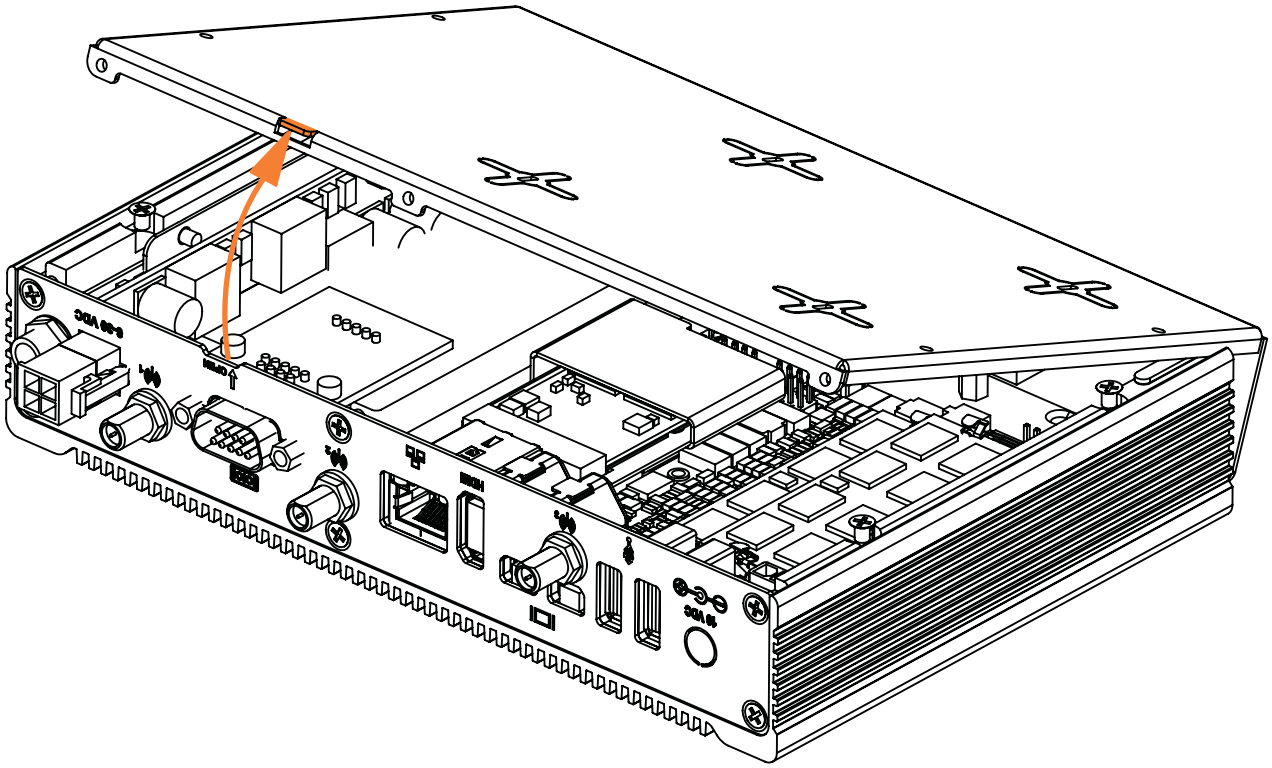

4 - ASSEMBLY

4.2 Selecting the Back plate

If you are building the system with a **D53427RKE Rend Lake NUC Motherboard** you must switch the back plates to accommodate the different I/O.

1. Remove the top 3 screws from the backplate and lift the back plate away

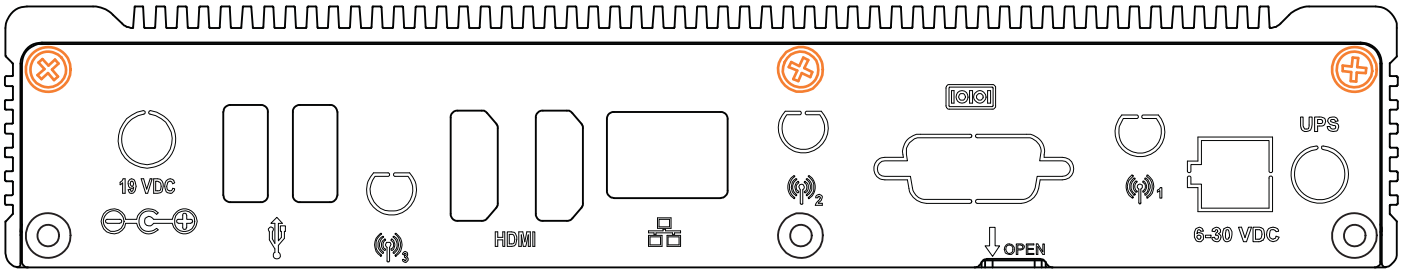

2. Align the D52427RKE Back plate and replace the 3 screws

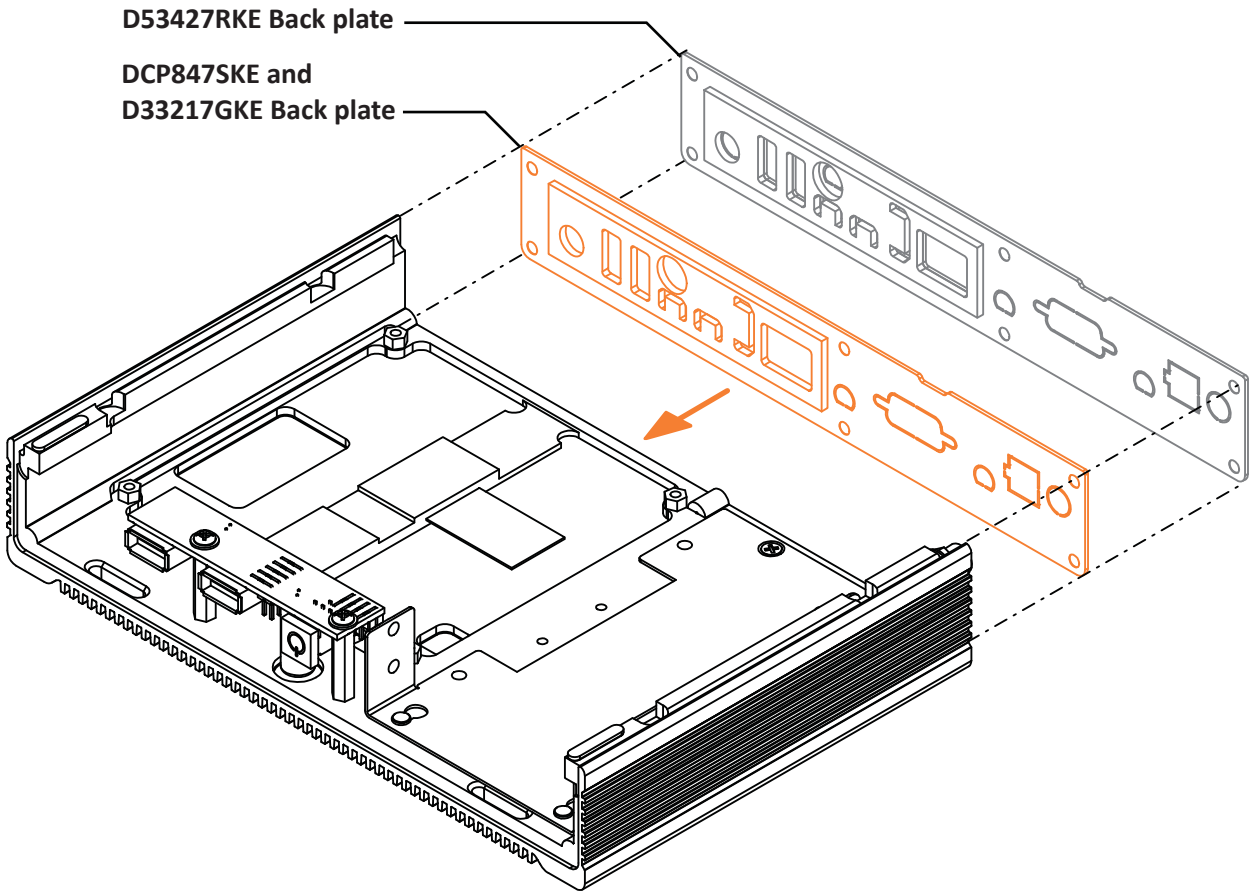

4 - ASSEMBLY

4.3 Removing Optional I/O Twist-outs

To ensure that you can connect your desired power supply, you must remove some twist-outs from your chosen back plate.

1. Selecting a **POWER SUPPLY** socket

D53427RKE

DCP847SKE
D33217GKE

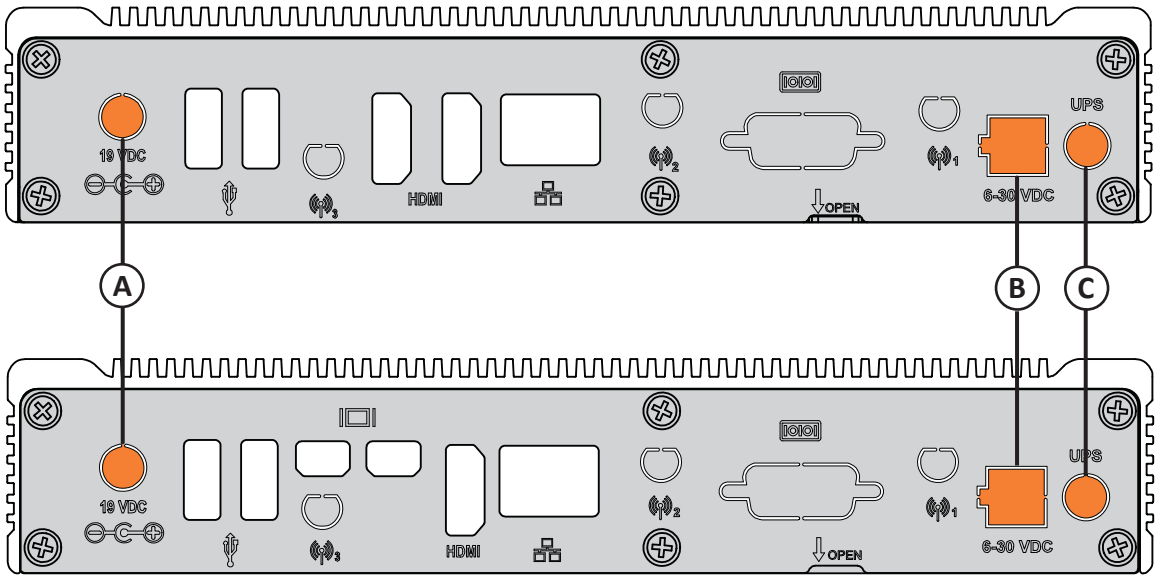

(A) Remove if using 19VDC Onboard Power with AC Adapter (most common configuration)

(B) Remove if using an Automotive Power Supply with 4-pin molex mini-fit connector

(C) Remove if using UPS Lithium Battery Power Supply

4 - ASSEMBLY

4.3 Removing Optional I/O Twist-outs

To ensure that you can access your desired I/O ports, you can remove some twist-outs from the back plate.

1. Selecting **ADDITIONAL I/O** sockets

D53427RKE

DCP847SKE
D33217GKE

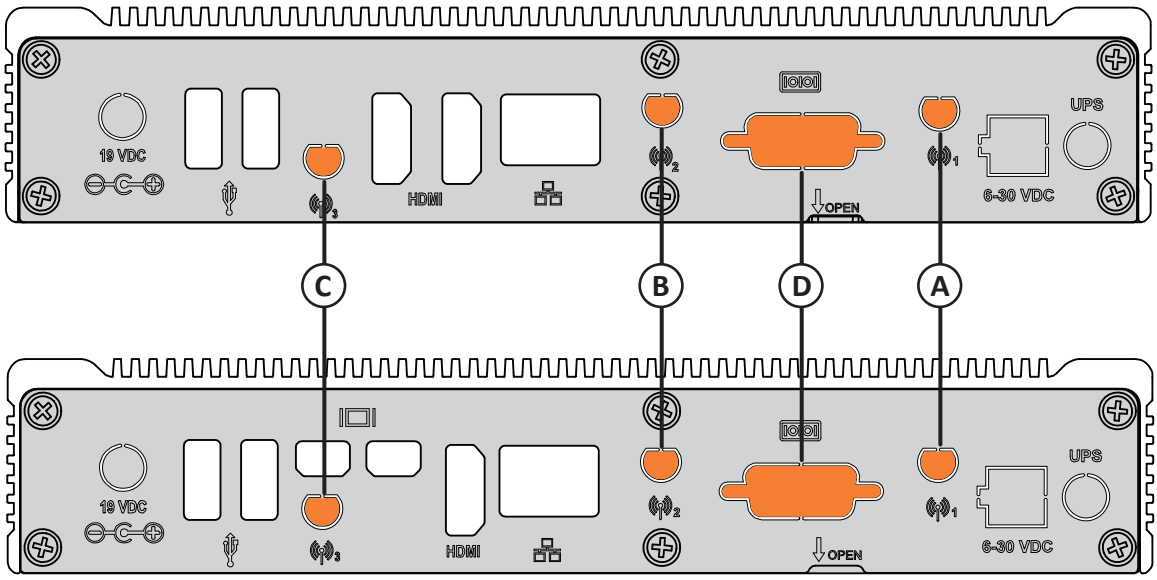

- (A) Optional Antenna Socket 1
- (B) Optional Antenna Socket 2
- (C) Optional Antenna Socket 3
- (D) Optional COM Port Socket

NEED ADDITIONAL I/O?
Our in-house engineering team can work with you to create custom front and back plates to your specifications.

sales@logicsupply.com
+1 802 861 2300, Option 1

4 - ASSEMBLY

4.4 Removing the Motherboard Heatsink

The next several pages will guide you through how to install the components needed to complete your system.

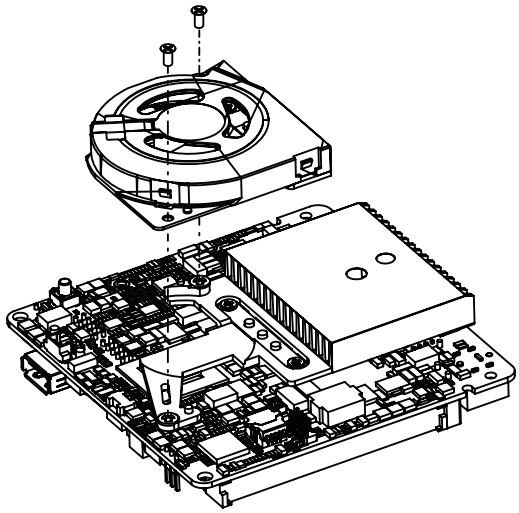

1. Remove the **fan** from the motherboard by undoing the 2 screws illustrated above.

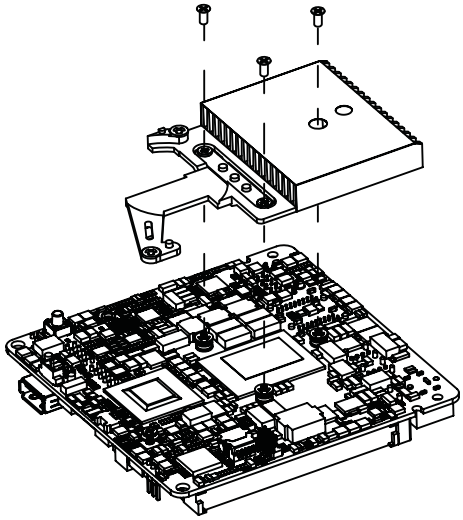

2. Remove the **3 screws** holding the heatsink in place and carefully pry the part from the board.

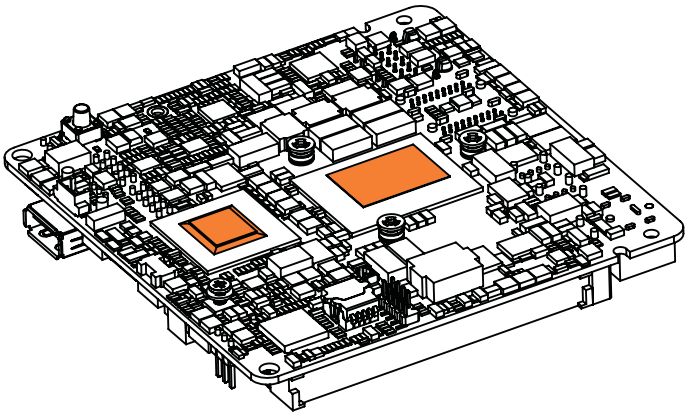

3. Using a thick dry cloth, clean the residual thermal paste from the dies illustrated above until there is a mirror finish.

4 - ASSEMBLY

4.5 Installing the Motherboard

The next several pages will guide you through how to install the components needed to complete your system.

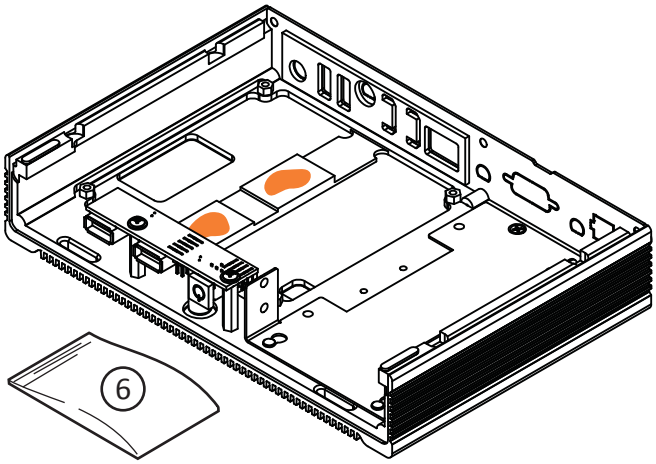

1. Apply small pea-sized amounts of **Thermal Paste** to the case, as shown above. Reserve some paste for later steps.

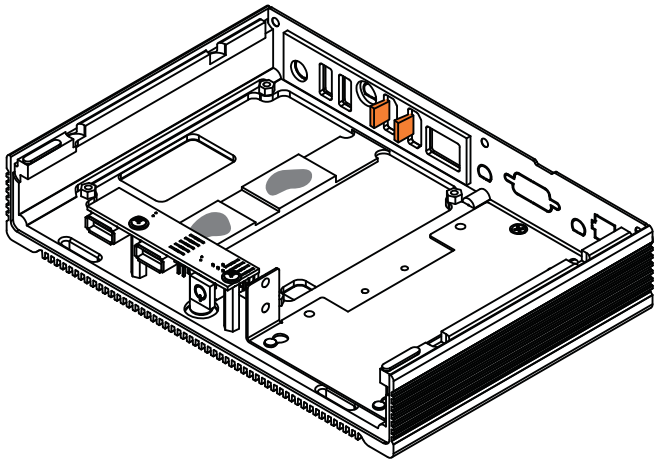

2. Fold back any **EMI Gasket Flaps** that cover the I/O opening. The flaps need to be positioned to touch the sides of the connectors.

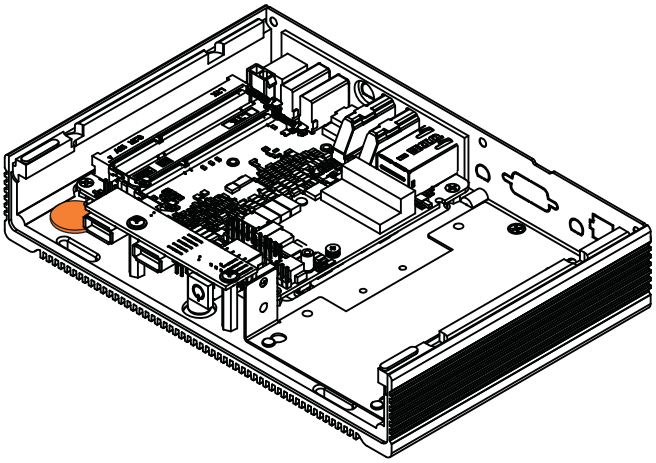

3. Place **Motherboard Battery** in the location shown above. The correct placement of the battery ensures proper thermal conduction between the processor and case.

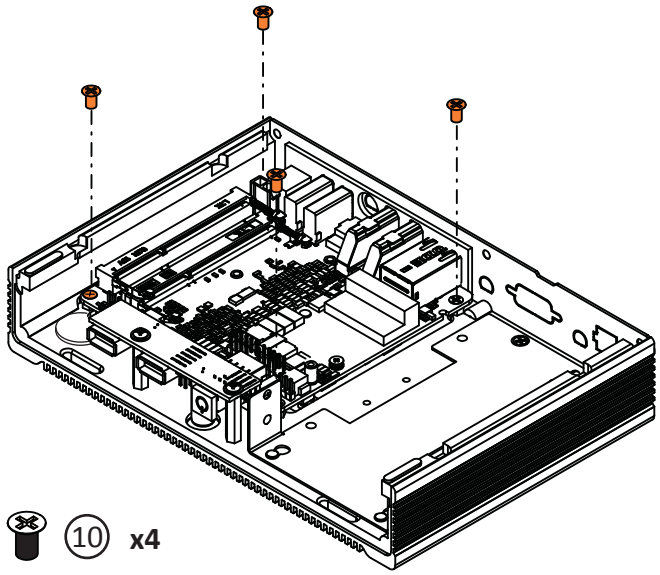

4. Use **Screws** to secure the motherboard to the case lid. Be sure to check that the EMI gasket flaps are in the correct loaction.

4 - ASSEMBLY

4.6 Installing the WiFi Card

Note: If you are NOT installing a Wifi Card, do step 5 and then proceed to step 8.

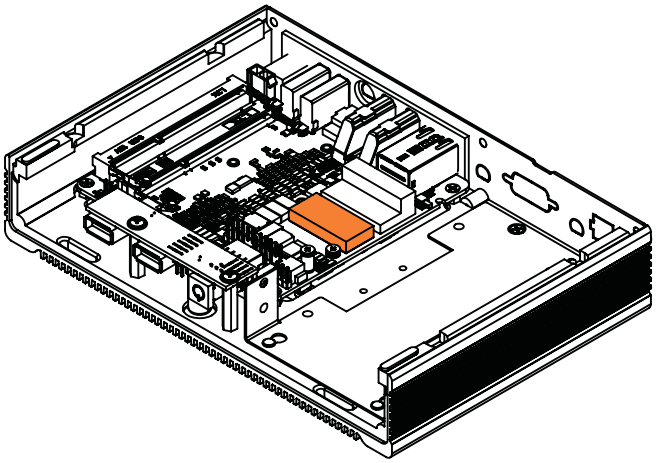

5. If you are not installing a wifi card, place **Rubber Block** in location shown. Then proceed to step 9.

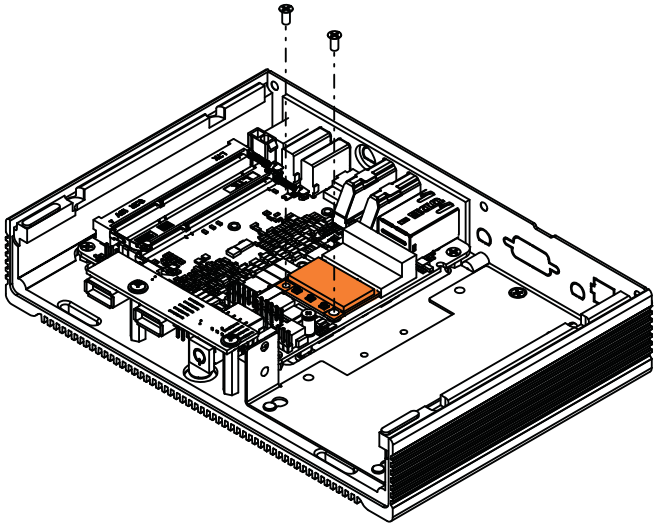

6. Install **Wifi Card** as shown above.

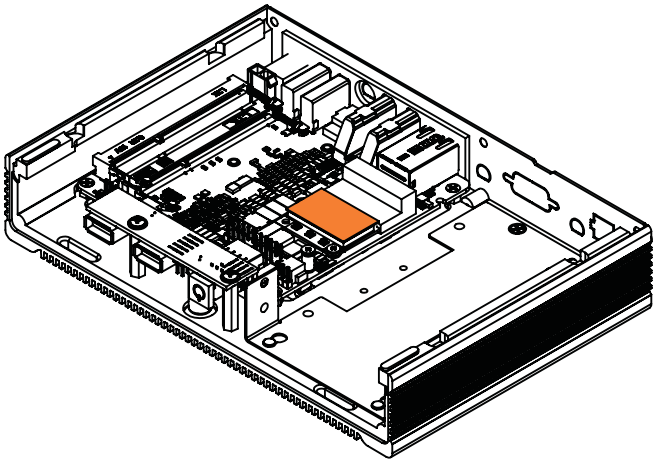

7. Adhere **Thermal Pad** to the top of the **Wifi Card**.

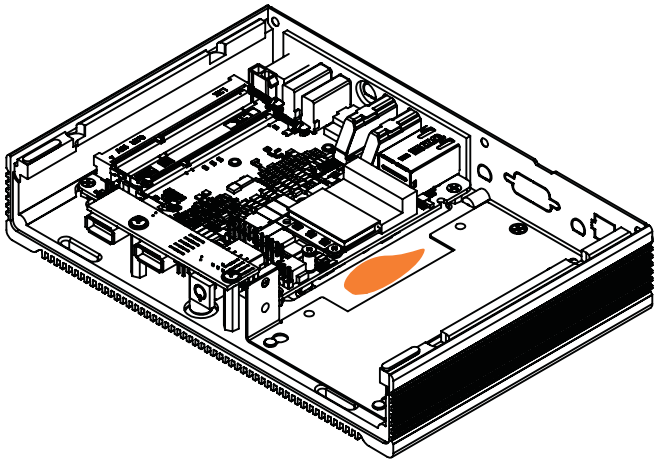

8. Apply a small amount of **Thermal Paste** to the location shown above.

4 - ASSEMBLY

4.7 Installing the mSATA Card

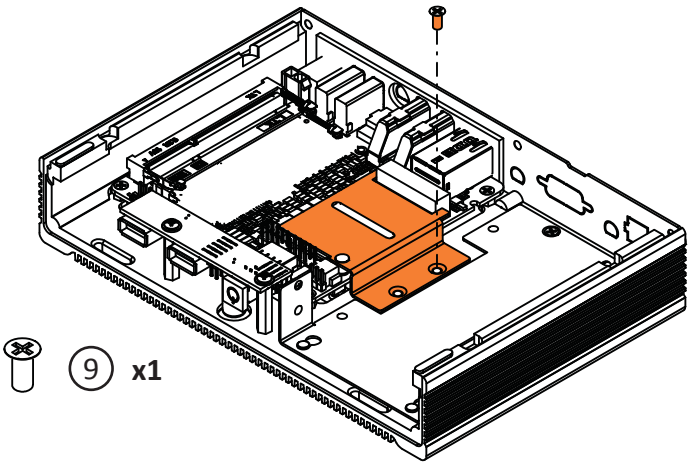

9. Install the **Wifi Heatsink Bracket** and secure in place using a **Screw** in the location shown above.

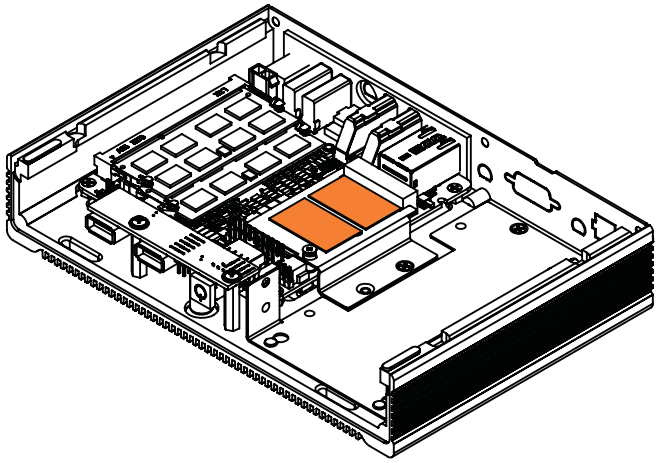

10. Adhere two **Thermal Pads** to the heatsink.

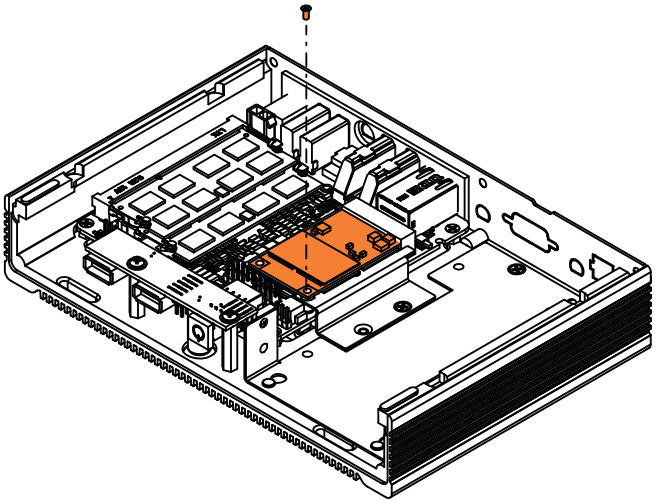

11. Use the **M2 Screw** that comes with the board to install the **mSATA**.

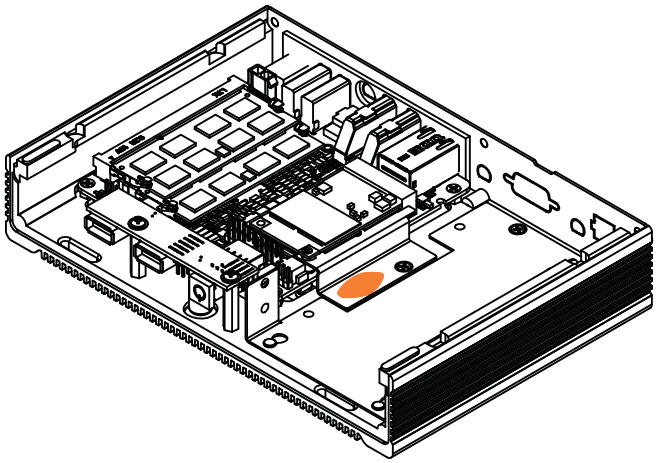

12. Apply **Thermal Paste** to the top of the **Wifi Heatsink Bracket** as shown.

4 - ASSEMBLY

4.8 Installing the mSATA Card

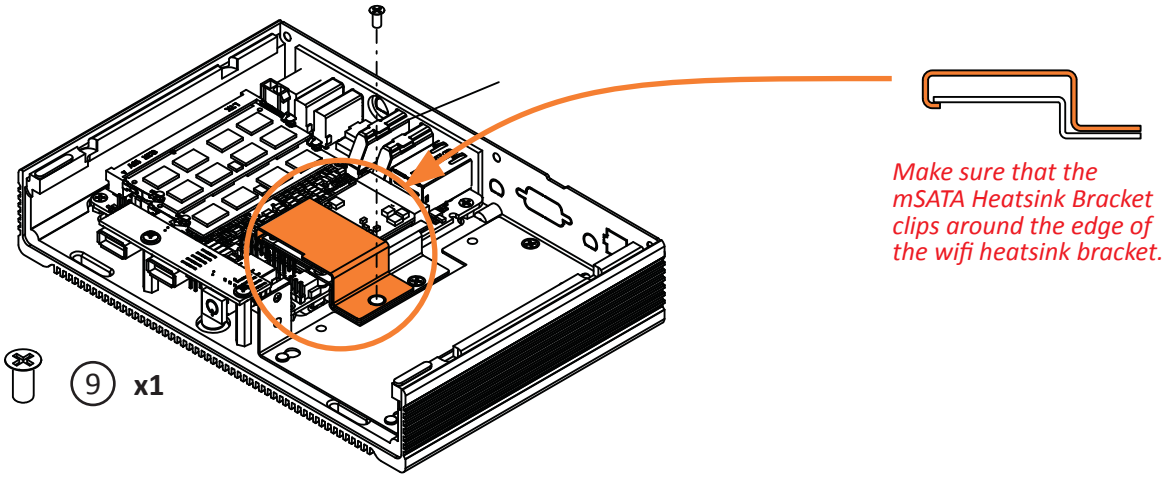

13. Install the **mSATA Heatsink Bracket** and secure in place using a **Screw** in the location shown above.

4.9 Wiring the Front Panel Power Button and USB Cables

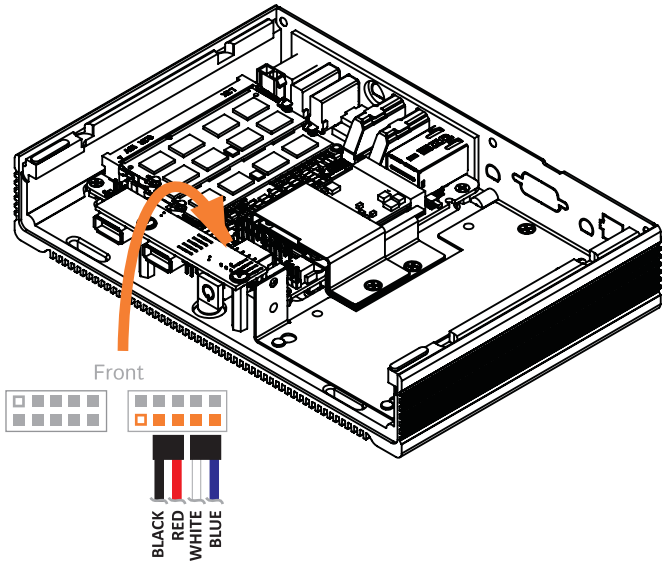

14. Connect the **Front Panel Power Button Cable** to the pin headers shown in **orange**.

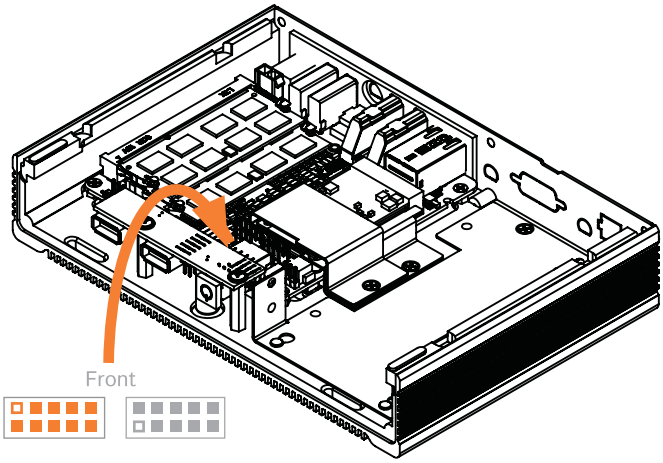

15. Connect the **Front Panel USB Cable** to the pin headers illustrated in **orange**.

4 - ASSEMBLY

4.10 Installing the Memory

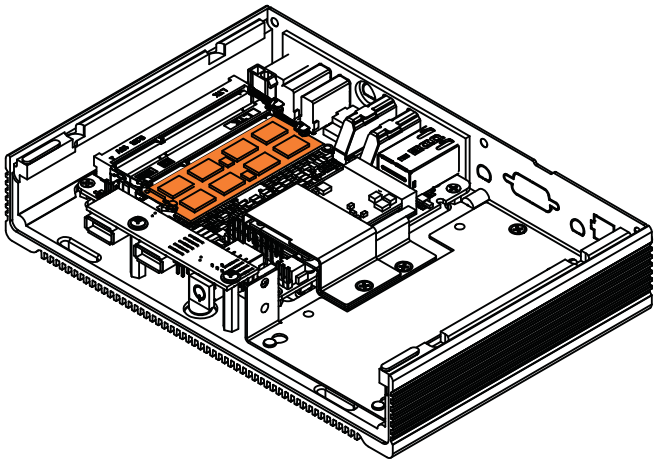

16. Insert first stick of **Memory** in the lower slot. To do this push the memory into the slot at a 45° angle. Make sure that the stick is fully inserted into the socket before hinging it down and locking it in place.

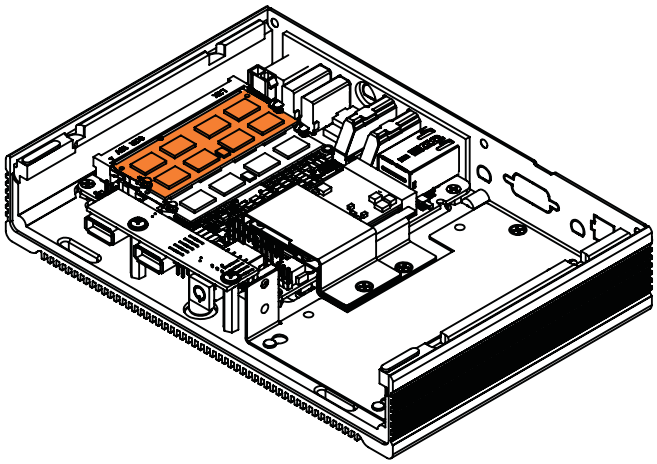

17. *Optional:* Insert second stick of **Memory** in the slot above.

4.11 Expansions Bay

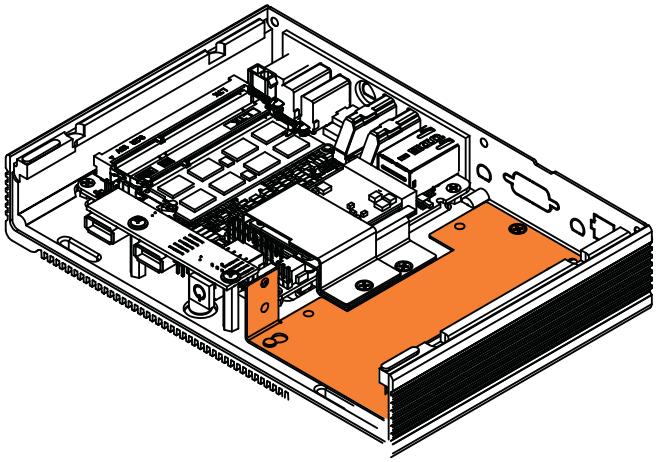

18. The expansion bay, highlighted in orange, can be used to house up to 2 SSDs, a UPS, or an automotive power supply. mSATA to SATA adapter (ADM100-K) may be needed for installation of a SSD or HDD.

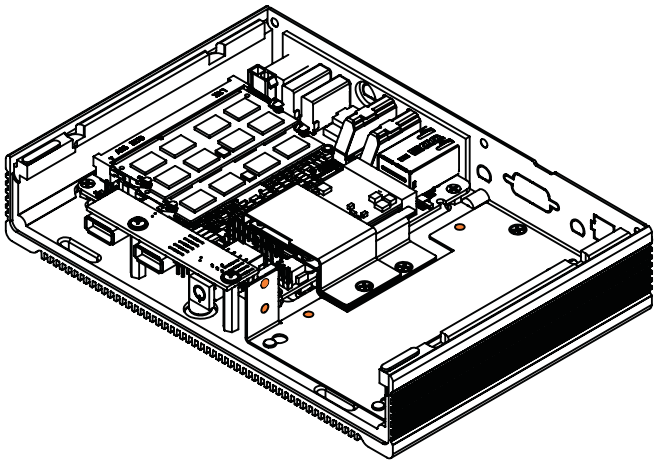

19. To install items, remove the expansion bay tray, mount components and then slot the tray with the components back in place.

4 - ASSEMBLY

4.12 Closing the Case

Note: If you are using any SMART Power settings, please refer to Section 5 - SMART Power Button first.
Note: If you are VESA mounting the system, please refer to Section 6 - Mounting Options first.

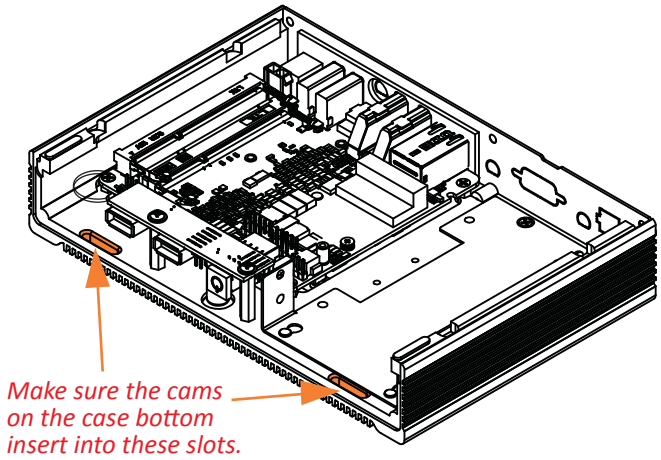

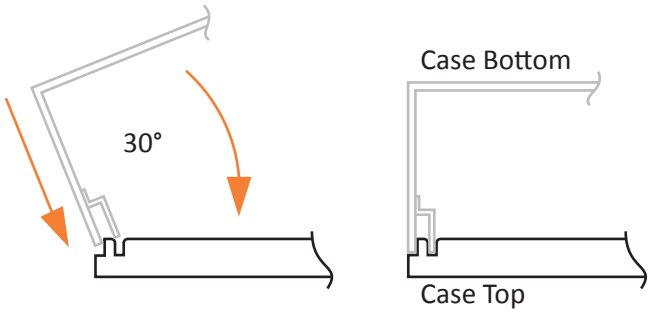

20. Align the case bottom to the case top. Ensure that the cams on the case bottom align with the slots indicated above.

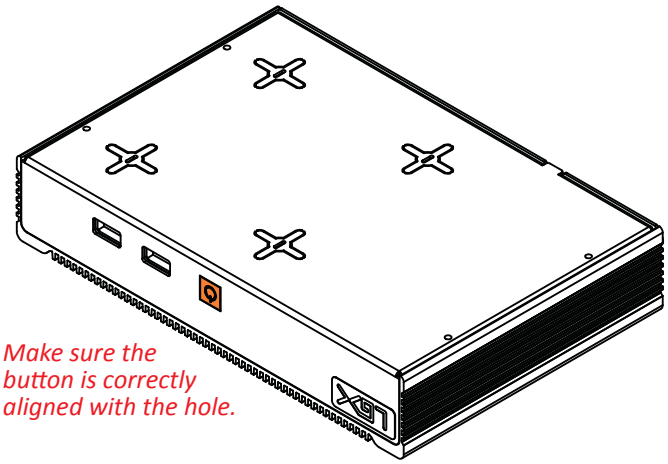

21. As you shut the case you may notice some resistance. This is designed to create an excellent fit between the heatsink and case lid.

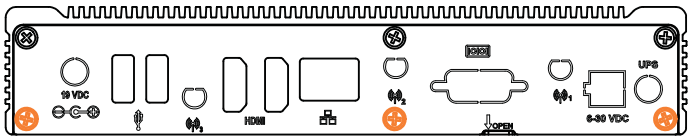

22. Replace the bottom **3 Screws** on the back plate.

5 - SMART POWER BUTTON

5.1 Smart Power Button Button Settings

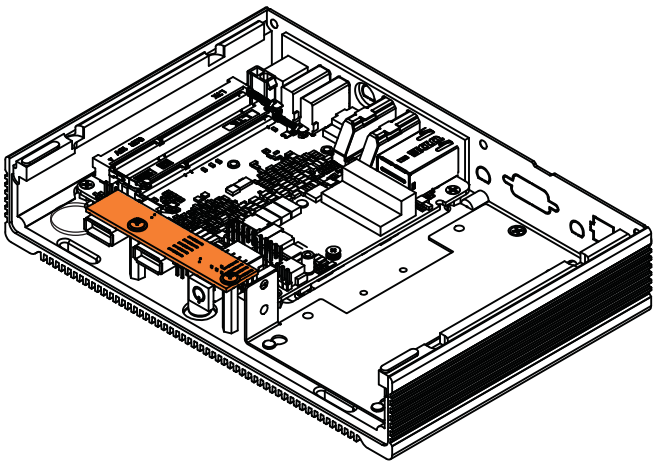

1. The **SMART Power Button and USB Board** is illustrated in orange.

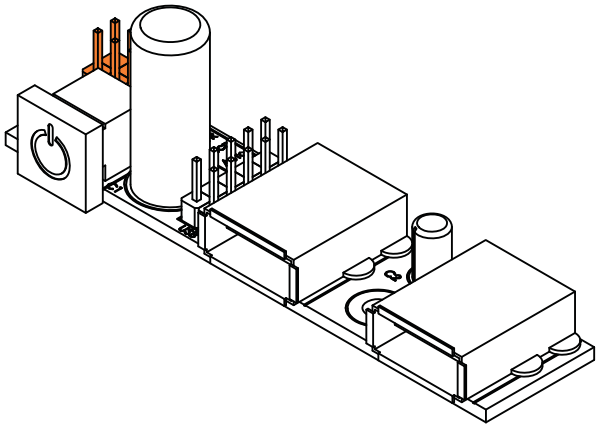

2. The power setting can be changed via the pin-headers highlighted in orange.

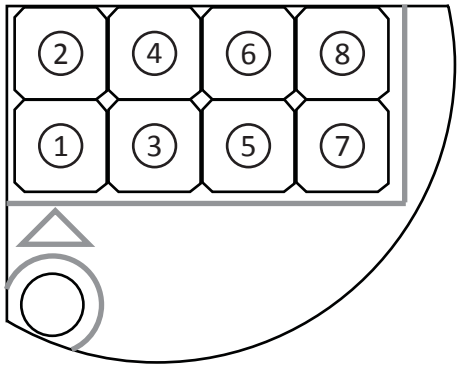

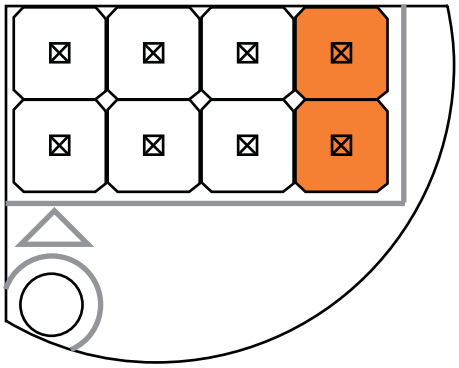

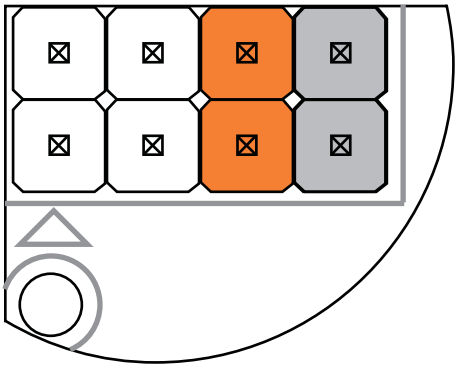

1. LED -
2. LED +
3. LED -
4. LED +
5. 6. Auto Reset
7. 8. Button Disable

3. Place jumper on pins 7 and 8 to enable the front panel power button (default setting).

4. To enable Auto Power On after power loss, place jumper across pins 5 and 6.

5. If you wish to enable the power button and Auto Power On, place one jumper across pins 5 and 6, and the second jumper across pins 7 and 8.

6 - MOUNTING OPTIONS

6.1 VESA or Wall Mounting - *VESA screw kit required (VESASK)*

The ML300 can be mounted to a monitor or stand with a VESA-75 mounting pattern.

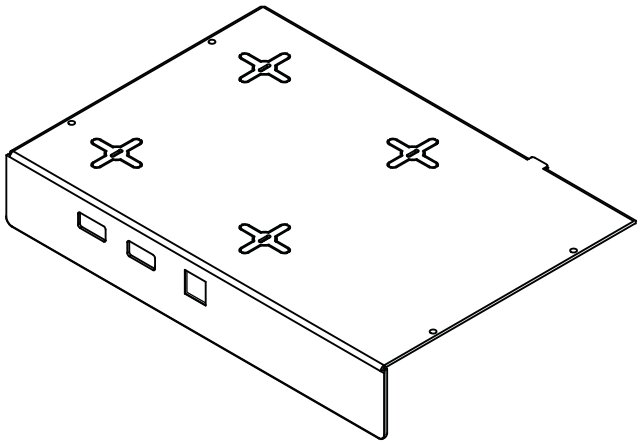

1. Remove the bottom cover from the case.

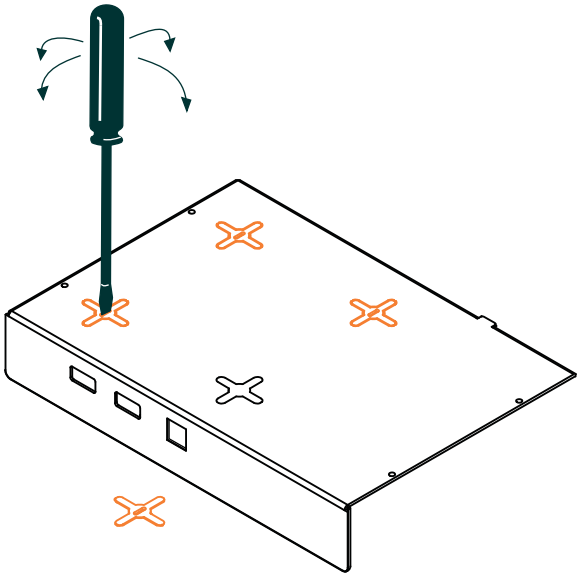

2. Use a flat-head screwdriver and insert into the VESA twist-outs. Rock the screwdriver side to side to remove all the twist-outs from the case.

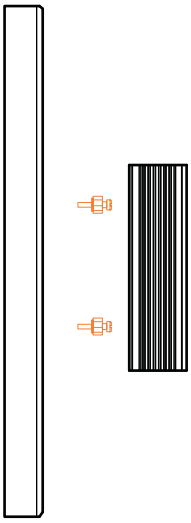

3. Install VESA screws into the back of a monitor or VESA stand. For wall mounting install 2 or 4 screws in a 75mm spaced pattern.

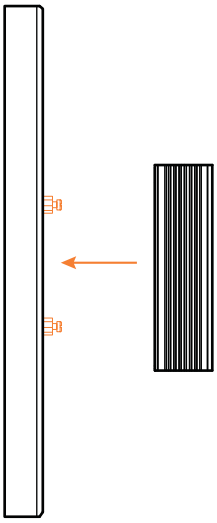

4. Offer up the ML300 to the VESA screws.

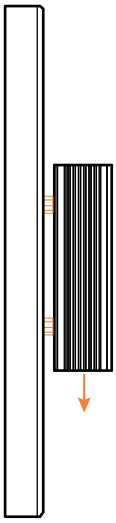

5. Make sure the VESA screws are properly inserted into the case and then slide the case down to lock in place.

6 - MOUNTING OPTIONS

6.2 Mounting Brackets - Wall Mounting Brackets Required *(WDMK-1040)*

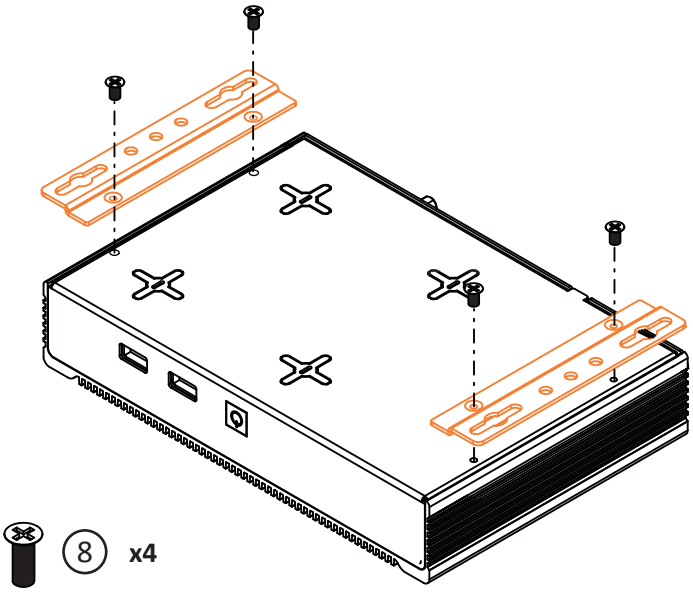

1. Attach the two **Wall Mounting Brackets** *(WDMK-1040)* to the case using four **Case Screws**

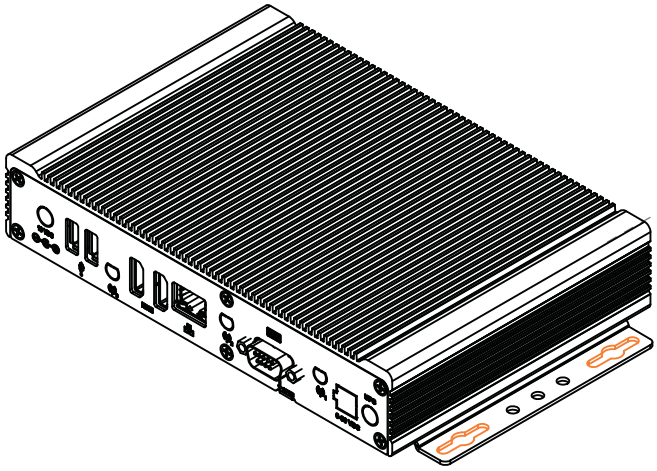

2. Mount the computer to surfaces using the slots shown in orange.

6 - MOUNTING OPTIONS

6.3 DIN Rail Mounting - *DIN Rail Mounting Kit Required (DINKit-1040)*

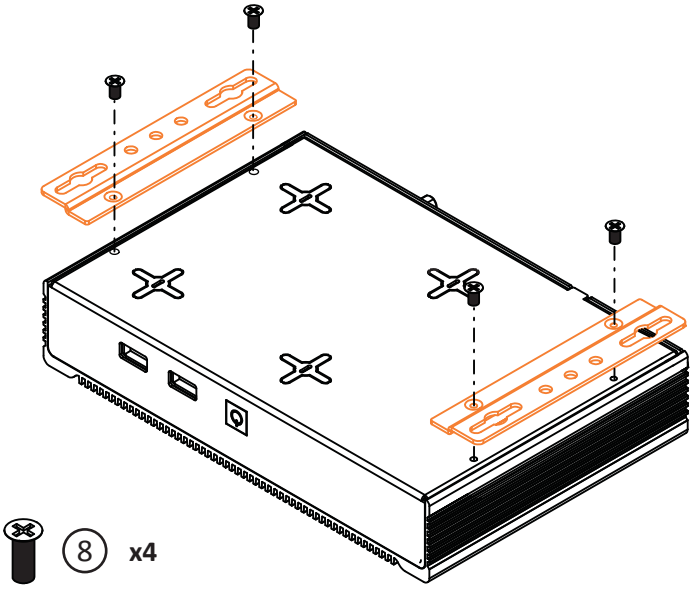

1. Attach the two **Wall Mounting Brackets** to the case using four **Case Screws**

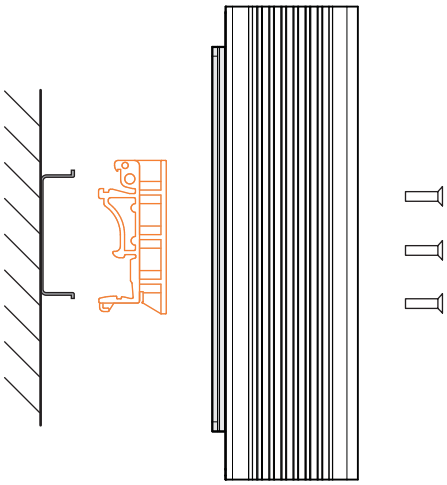

2. Exploded diagram of components.

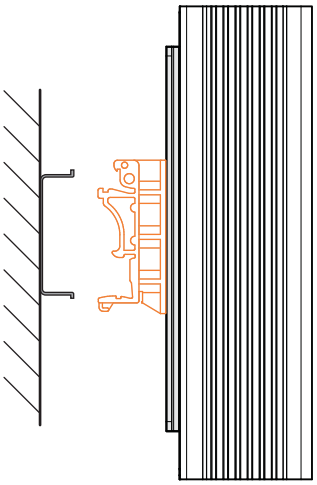

3. Attach **DIN Clips** to the **Mounting Brackets** with **Supplied Screws.**

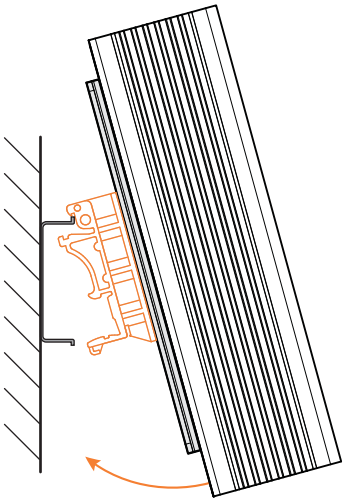

4. Hook the top of the **DIN Clip** onto the **DIN Rail.**

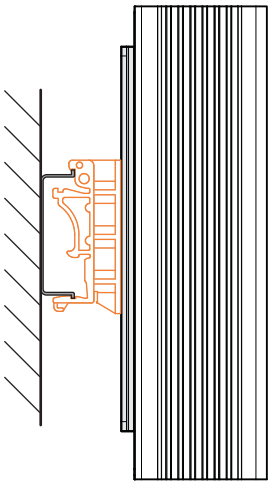

5. Hinge down the case until the **DIN Clip** locks into position.

6 - MOUNTING OPTIONS

6.4 Rubber Feet - *Included*

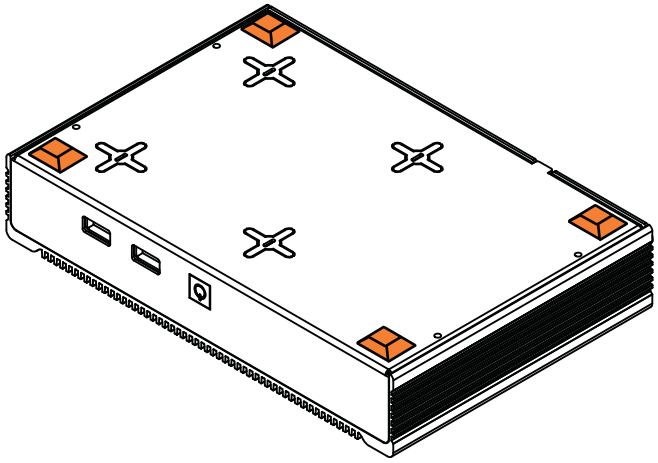

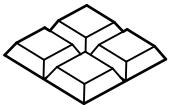

7 **x4**

1. Separate the rubber feet, remove the backing, and firmly press into place on the bottom of the case.